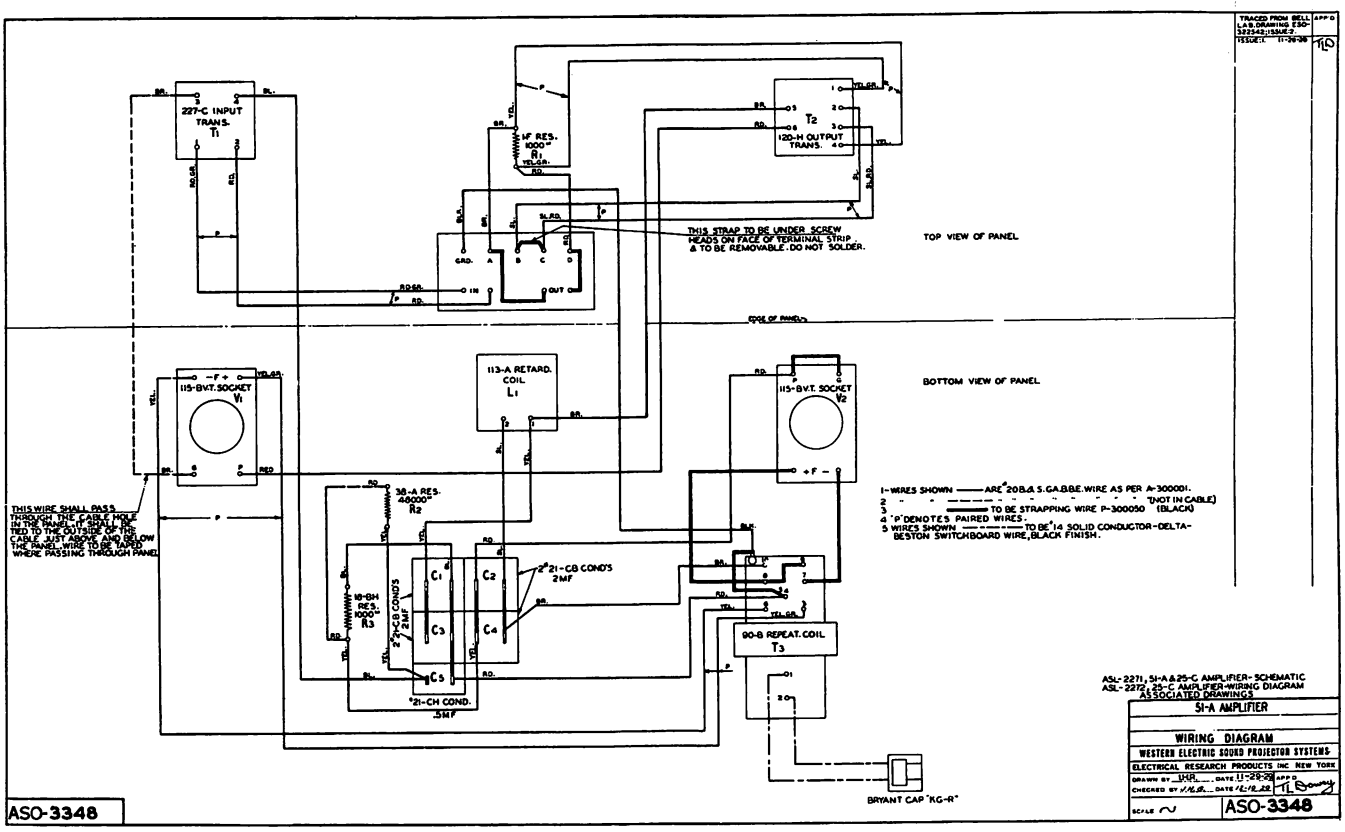
227-C INPUT TRANS. T1
1F RES. 1000Ω R1
120-H OUTPUT TRANS. T2
THIS STRAP TO BE UNDER SCREW HEADS ON FACE OF TERMINAL STRIP & TO BE REMOVABLE. DO NOT SOLDER.
TOP VIEW OF PANEL
EDGE OF PANEL
113-A RETARD. COIL L1
115-BV.T. SOCKET V1
115-BV.T. SOCKET V2
BOTTOM VIEW OF PANEL
THIS WIRE SHALL PASS THROUGH THE CABLE HOLE IN THE PANEL & SHALL BE TIED TO THE OUTSIDE OF THE CABLE JUST ABOVE AND BELOW THE PANEL. WIRE TO BE TAPED WHERE PASSING THROUGH PANEL
38-A RES. 48000Ω R2
18-BH RES. 1000Ω R3
2-21-CB COND'S 2MF
21-CH COND. .5MF
90-B REPEAT. COIL T3
BRYANT CAP "KG-R"
1-WIRES SHOWN ARE 20B.&S.GA.B.B.E. WIRE AS PER A-300001.
2 " " TO BE STRAPPING WIRE P-300050 (BLACK)
4 "P" DENOTES PAIRED WIRES.
5 WIRES SHOWN TO BE 14 SOLID CONDUCTOR-DELTA-BESTON SWITCHBOARD WIRE, BLACK FINISH.
ASL-2271, 51-A & 25-C AMPLIFIER-SCHEMATIC
ASL-2272, 25-C AMPLIFIER-WIRING DIAGRAM
ASSOCIATED DRAWINGS
51-A AMPLIFIER
WIRING DIAGRAM
WESTERN ELECTRIC SOUND PROJECTOR SYSTEMS
ELECTRICAL RESEARCH PRODUCTS INC NEW YORK
ASO-3348

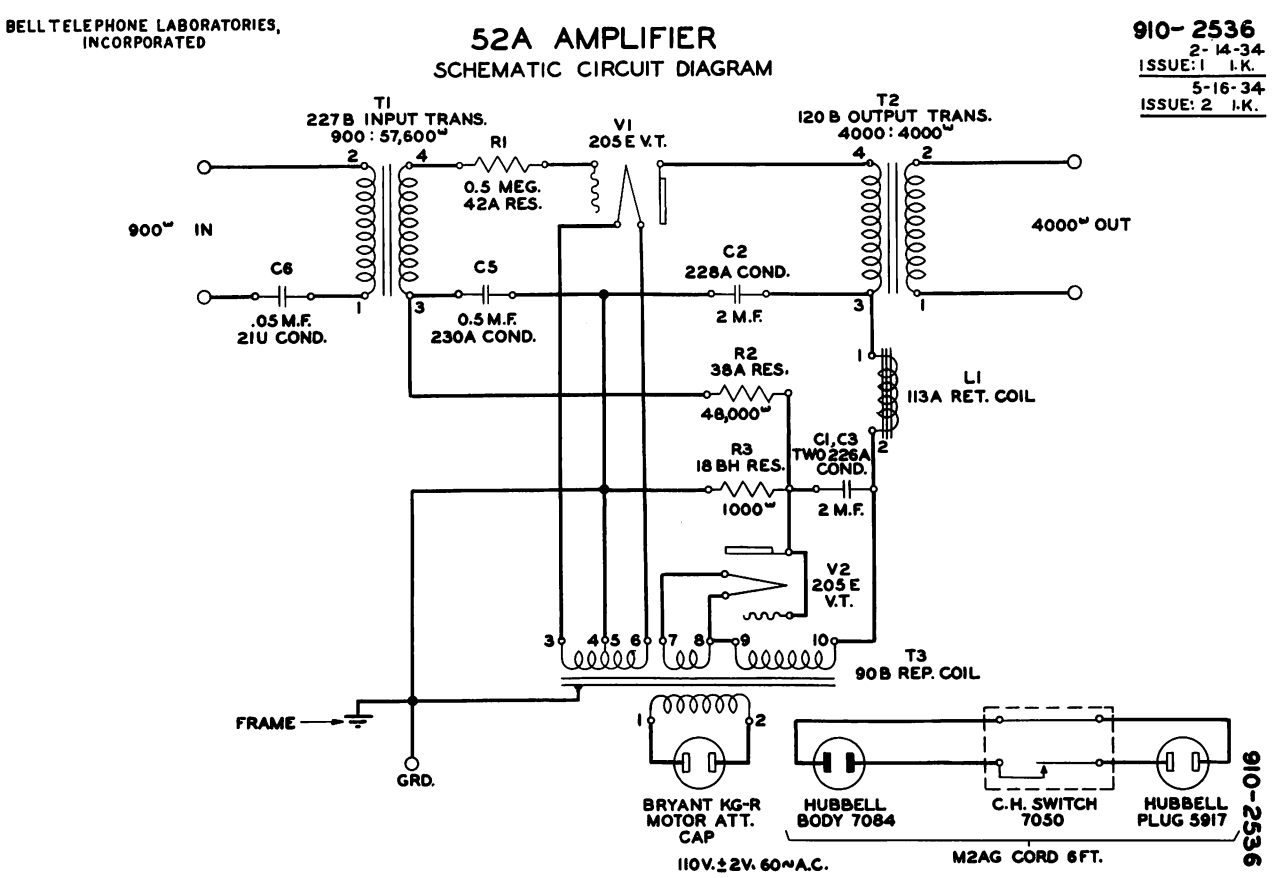
BELL TELEPHONE LABORATORIES, INCORPORATED
52A AMPLIFIER
SCHEMATIC CIRCUIT DIAGRAM
910-2536
2-14-34
ISSUE: 1 I.K.
5-16-34
ISSUE: 2 I.K.
T1
227B INPUT TRANS.
900 : 57,600Ω
R1
0.5 MEG.
42A RES.
V1
205E V.T.
T2
120B OUTPUT TRANS.
4000 : 4000Ω
900Ω IN
4000Ω OUT
C6
.05 M.F.
21U COND.
C5
0.5 M.F.
230A COND.
C2
228A COND.
2 M.F.
R2
38A RES.
48,000Ω
L1
113A RET. COIL
R3
18 BH RES.
1000Ω
C1, C3
TWO 226A COND.
2 M.F.
V2
205E V.T.
T3
90B REP. COIL
FRAME
GRD.
BRYANT KG-R MOTOR ATT. CAP
110V. ± 2V. 60~A.C.
HUBBELL BODY 7084
C.H. SWITCH 7050
HUBBELL PLUG 5917
M2AG CORD 6FT.
910-2536