NO 7-1
RECTIFIER
12 B

3-1-37

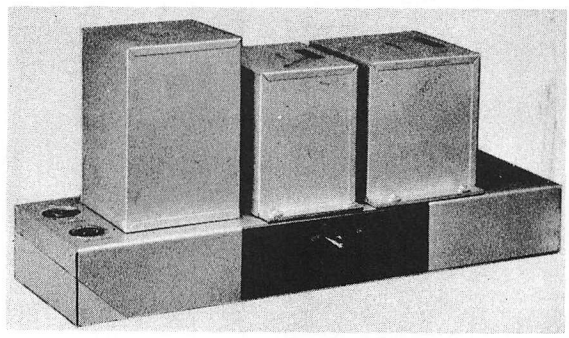

EQUIPMENT CHARACTERISTICS

WEIGHT - - - - - - - - - - - 28 lbs.

SIZE - - - - - - - - - - - - 18" x 5-5/8" x 8-3/16"

MOUNTING - - - - - - - - - - Apparatus is mounted on Pan Type Aluminum Chassis. Receptacles are provided for Power Outlets.

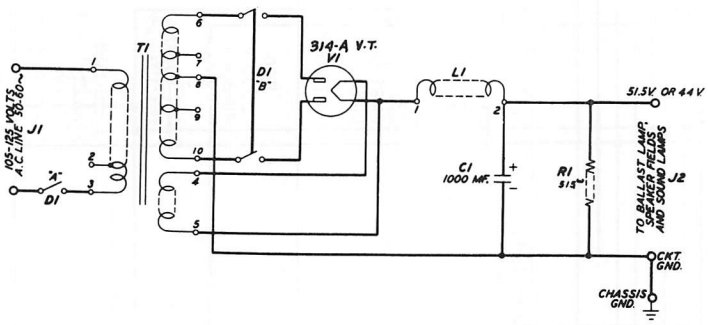

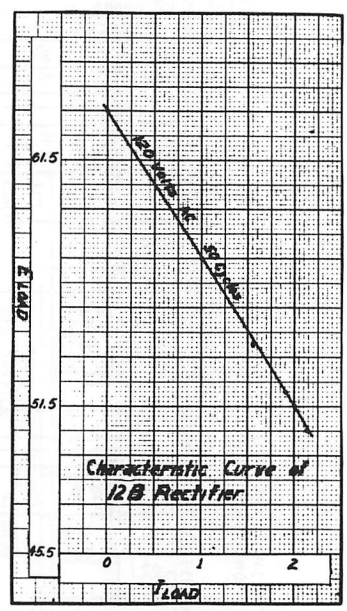

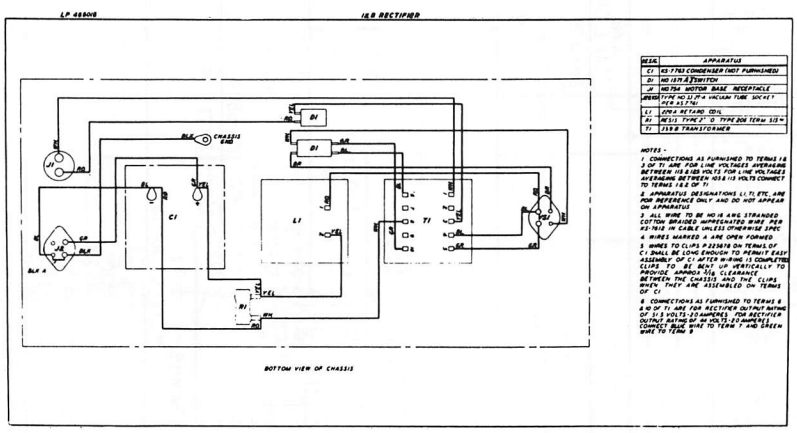

ELECTRICAL CHARACTERISTICS

POWER OUTPUT - - - - - - - 44 or 51.5 Volts at 2.0 Amps.

POWER INPUT - - - - - - - 105-125 Volts AC 50-60 Cycles 2.3 Amps.

USE - - - - - - - - - - - To supply Speaker Field Current and Sound Lamp Exciting Current. It is primarily intended for use with the 500 Type Amplifier Set.